RevNo	Revision note	Date	Signature	Checked

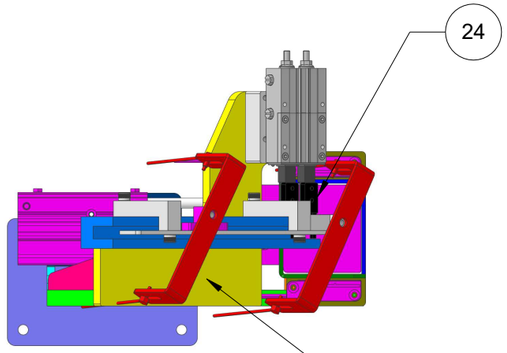

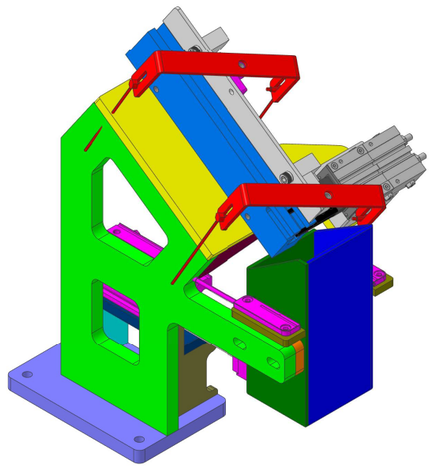

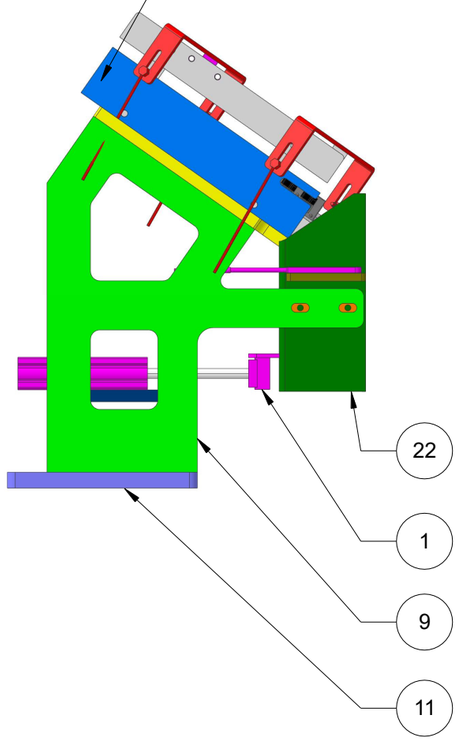

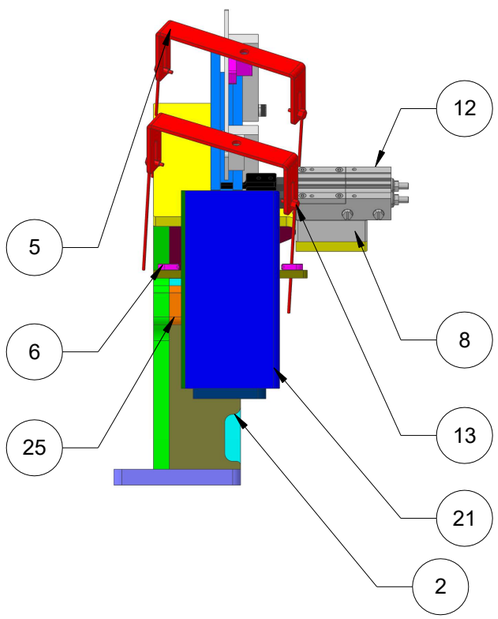

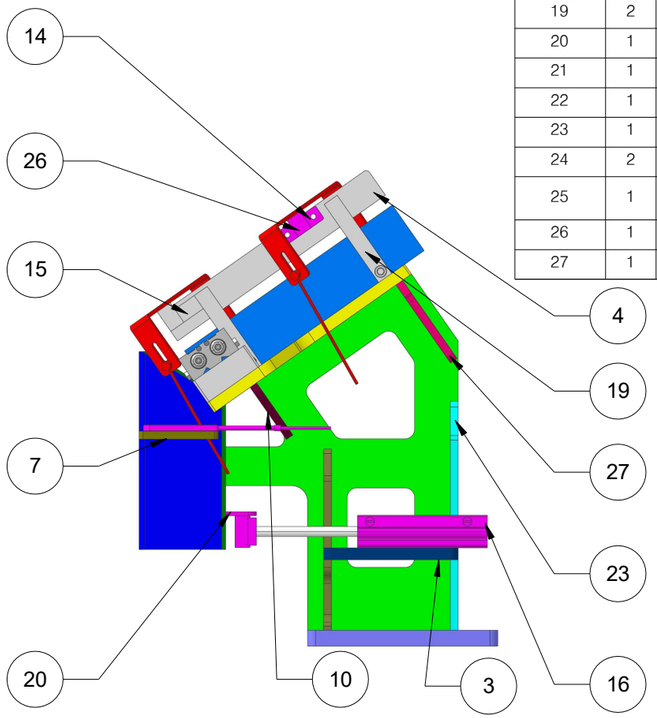

ITEM NUMBER	QTY	PART NUMBER	PART NAME	REV
1	1	FC-24-21740-1-MRE	MGPM Rod End	A
2	1	FC-24-21740-1-SGTG	Short Gravity Track Stand Gussett	
3	1	FC-24-21740-1-GCMP	Gate Cylinder Mount Plate	A
4	1	FC-24-21740-1-TTC	Top Confinement	A
5	2	FC-24-21740-1-TBB	Thrubeam Sensor Bracket	N/A
6	2	FU-A40	KEYENCE 40mm Array Sensor	N/A
7	2	FC-24-21740-1-ASM	FU-A40 Mount Block	N/A
8	1	FC-24-21740-1-TMB	Toggle Mount Block	A
9	1	FC-24-21740-1-ETS	Escapement & Track Stand	A
10	1	FC-24-21740-1-ESCG	Escapement Gusset	A
11	1	FC-24-21740-1-TSBP	Track Stand Base Plate	A
12	1	MIW12-12D2A	Discharge Toggle Cylinder	N/A
13	4	FU-77TZ	KEYENCE Fiber Unit Thrubeam	N/A
14	1	FC-24-21740-1-JMB	Air Jet Mount Block	A
15	2	FC-24-21740-1-68SO	.75" Standoff	A
16	1	MGPM12-75Z	Accumulation Gate Cylinder	N/A
17	1	FC-24-21740-1-GTMP	Gravity Track Mount Plate	A
18	1	FC-24-21740-1-GT	Gravity Track	A
19	2	FC-24-21740-1-GTSO	Track Standoff	A
20	1	FC-24-21740-1-ACG	Accumulation Gate	A
21	1	FC-24-21740-1-ATA	Accumulation Tube Side A	A
22	1	FC-24-21740-1-ATB	Accumulation Tube Side B	A
23	1	FC-24-21740-1-GTG	Gravity Track Stand Gussett	A
24	2	FC-24-21740-1-DTF	Discharge Toggle Finger	A
25	1	FC-24-21740-1-ATMB	Accumulation Tube Mount Block	A
26	1	FC-24-21740-1-58SO	.5 x .5 x .625 Standoff	A
27	1	FC-24-21740-1-GTPG	Gravity Track Plate Gusset	A

Itemref	Quantity	Title/Name, designation, material, dimension etc			Article No./Reference	
Drawn by Zach B.		Checked by	Approved by - date	File name	Date 6/6/25	Scale 1:1
FEEDING CONCEPTS, INC. Automatic Parts Feeding Equipment 15235 Herriman Blvd. Noblesville, IN 46060 (317) 773-2040		Gravity Track & Escapement Assembly				
		Rhino Tool FC-24-21740-1			Edition	Sheet 1 OF 1